Printer Parts

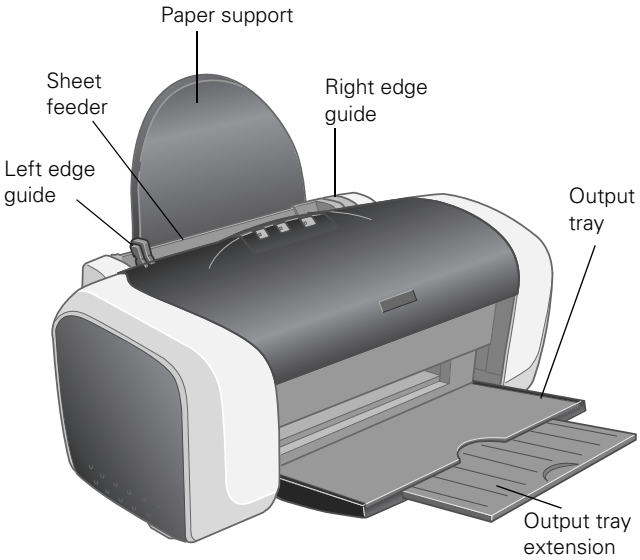

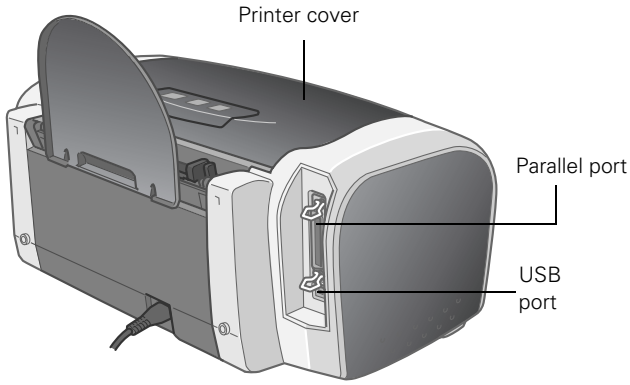

Accessories

Ink Cartridges

Cartridge	Part number
Black (high capacity)*	T043120
Black (standard capacity)*	T044120
Cyan	T044220
Magenta	T044320
Yellow	T044420
Color multipack (cyan, magenta, and yellow)	T044520

* Availability of black ink cartridge types varies by location. The printer includes the high capacity black ink cartridge.

Paper

Paper name*	Size	Part number
EPSON Premium Bright White Paper	Letter (8.5 x 11 inches)	S041586
EPSON DuraBrite Glossy Photo Paper	Letter (8.5 x 11 inches)	S041731
	4 x 6 inches	S041734
EPSON Photo Quality Ink Jet Paper	Letter (8.5 x 11 inches)	S041062
	A4 (8.3 x 11.7 inches)	S041061
	Legal (8.5 x 14 inches)	S041067
EPSON Glossy Photo Paper or EPSON Photo Paper	Letter (8.5 x 11 inches)	S041141/ S041649/ S041271/ S041272
	A4 (8.3 x 11.7 inches)	S041140
	4 x 6 inches	S041134/ S041671
EPSON Matte Paper Heavyweight	Letter (8.5 x 11 inches)	S041257
Double-Sided Matte Paper	Letter (8.5 x 11 inches)	S041568
Enhanced Matte Paper (Archival Matte Paper)	Letter (8.5 x 11 inches)	S041341
EPSON Premium Semigloss Photo Paper	Letter (8.5 x 11 inches)	S041331
EPSON Ink Jet Transparencies	Letter (8.5 x 11 inches)	S041064
EPSON Photo Quality Ink Jet Cards	A6 (4.1 x 5.8 inches)	S041054

* The availability of paper types and sizes varies by location.

To order EPSON ink cartridges, and paper, contact your dealer or call EPSON at (800) 873-7766 or visit the EPSON Store at www.epsonstore.com (U.S. sales only). In Canada, please call (800) 463-7766 for dealer referral.

Printer Specifications

Printing

Printing method	On-demand ink jet
Nozzle configuration	
Black	180 nozzles
Color	177 nozzles (59 each: cyan, magenta, yellow)
Print direction	Bidirectional with logic seeking
Input buffer	128KB

Mechanical

Paper feed method	Friction
Paper path	Sheet feeder, top entry, front out
Sheet feeder capacity	120 sheets of 24 lb (90 g/m^2) paper
Dimensions	
Storage	Width: 18.1 inches (460 mm) Depth: 9.5 inches (242 mm) Height: 7.8 inches (178 mm)
Printing	Width: 18.5 inches (460 mm) Depth: 23.3 inches (437 mm) Height: 12.4 inches (308 mm)
Weight	9.3 lb (4.2 kg) without the ink cartridges

Electrical

Input voltage	120 or 220 V (90 to 266 V)
Rated frequency range	50 to 60 Hz
Input frequency range	49.5 to 60.5 Hz
Rated current	0.2 A (Max. 0.4 A)
Power consumption	

Approx. 19 W (ISO 10561 Letter Pattern)
Approx. 4.5 W in standby mode
Approx. 0.8 W in power-off mode

Environmental

Temperature	
Operation	50 to 95 °F (10 to 35 °C)
Storage*	–4 to 104 °F (–20 to 40 °C) 1 month at 104 °F (40 °C)
Transit*	–4 to 140 °F (–20 to 60 °C) 120 hours at 140 °F (60 °C)
Humidity (without condensation)	
Operation	20 to 80% RH
Storage*	5 to 85% RH

*Stored in shipping container

Safety Approvals

Safety standards	UL 60950, CSA C22.2 No. 60950
EMC	FCC part 15 subpart B class B CSA C108.8 Class B

Ink Cartridges

Caution: To ensure good results, use genuine EPSON cartridges and do not refill them. Other products may cause damage to the printer not covered by EPSON's warranty. Don't use an ink cartridge if the date on the package has expired.

Black Ink Cartridge (high capacity) - T043120

Color	Black
Capacity*	1350 pages ISO/IEC 10561 letter pattern. 950 pages at 5% coverage
Cartridge life	6 months at 77 °F (25 °C) after opening the package
Temperature	
Storage	–4 to 104 °F (–20 to 40 °C) 1 month at 104 °F (40 °C)
Transit	–22 to 122 °F (–30 to 50 °C) 10 days at 122 °F (50 °C)
Freezing**	3.2 °F (–16 °C)
Dimensions	
Width	0.9 inches (22 mm)
Depth	2.9 inches (73.5 mm)
Height	2.2 inches (55.3 mm)

* The figure given is based on continuous printing after ink replacement. Cartridge yields will vary with images printed, print settings, paper types and frequency of use.

** Ink thaws and is usable after approximately 3 hours at 77 °F (25 °C).

Black Ink Cartridge (standard capacity) - T044120

Color	Black
Capacity*	600 pages ISO/IEC 10561 letter pattern. 420 pages of graphics at 5% coverage
Cartridge life	6 months at 77 °F (25 °C) after opening the package
Temperature	
Storage	–4 to 104 °F (–20 to 40 °C) 1 month at 104 °F (40 °C)
Transit	–22 to 122 °F (–30 to 50 °C) 10 days at 122 °F (50 °C)
Freezing**	3.2 °F (–16 °C)
Dimensions	
Width	0.5 inches (12.7 mm)
Depth	2.9 inches (73.5 mm)
Height	2.2 inches (55.3 mm)

* The figure given is based on continuous printing after ink replacement. Cartridge yields will vary with images printed, print settings, paper types and frequency of use.

** Ink thaws and is usable after approximately 3 hours at 77 °F (25 °C).

Color Ink Cartridges (Cyan - T044220, Magenta - T044320, and Yellow - T044420)

Color	Cyan, magenta, and yellow
Capacity*	450 pages at 5% coverage
Cartridge life	6 months at 77 °F (25 °C) after opening the package
Temperature	
Storage:	–4 to 104 °F (–20 to 40 °C) 1 month at 104 °F (40 °C)
Transit:	–22 to 122 °F (–30 to 50 °C) 10 days at 122 °F (50 °C)
Freezing**	3.2 °F (–16 °C)
Dimensions	
Width	0.5 inches (12.7 mm)
Depth	2.9 inches (73.5 mm)
Height	2.2 inches (55.3 mm)

* The figure given is based on continuous printing after ink replacement. Cartridge yields will vary with images printed, print settings, paper types and frequency of use.

** Ink thaws and is usable after approximately 3 hours at 77 °F (25 °C).

Paper

Media type	Size	Paper types	Thickness	Weight
Single sheets	A4 (8.3 × 11.7 inches) A5 (5.8 × 8.3 inches) A6 (4.1 × 5.8 inches) Letter (8.5 × 11 inches) Legal (8.5 × 14 inches) Half-letter (5.5 × 8.5 inches) Executive (7.3 × 10.5 inches) 4 × 6 inches 5 × 7 inches 3.5 × 5 inches 8 × 10 inches User Defined up to 8.3 × 44 inches	Plain bond paper	0.003 to 0.004 inch (0.08 to 0.11 mm)	17 to 24 lb (64 to 90 g/m²)
EPSON DURABrite Glossy Photo Paper	Letter (8.5 x 11 inches) 4 × 6 inches	DURABrite Glossy Photo Paper distributed by EPSON		
Heavyweight Matte Paper Double-Sided Matte Paper Enhanced (Archival) Matte Paper Premium Semigloss Photo Paper Ink Jet Transparencies Premium Bright White Paper	Letter (8.5 × 11 inches)	Heavyweight, Double-Sided, and Enhanced (Archival) Matte paper, Premium Semigloss Photo Paper, Ink Jet Transparencies, Premium Bright White Paper distributed by EPSON	—	—
Envelopes	No. 10, 4.1 × 9.5 inches (104 × 241 mm) DL, 4.3 × 8.7 inches (110 × 220 mm) C6, 4.4 × 6.4 inches (114 × 162 mm)	Plain bond paper or air mail paper	—	12 to 20 lb (45 to 75 g/m²)
Photo Quality Ink Jet Paper	Letter (8.5 × 11 inches) Legal (8.5 × 14 inches) A4 (210 × 297 mm)	Photo Quality Ink Jet Paper distributed by EPSON	—	—
Ink jet cards	A6 (105 × 148 mm)	Ink jet cards distributed by EPSON	—	—
Glossy Photo Paper (Photo Paper)	Letter (8.5 × 11 inches) A4 (210 × 297 mm) 4 × 6 inches	Glossy Photo Paper (Photo Paper) distributed by EPSON	—	—

Note: Poor quality paper may reduce the print quality and cause paper jams or other problems. If you have print quality problems, switch to a higher grade paper.

Do not load curled or folded paper.

Use paper only under these conditions:
Temperature: 59 to 77 °F (15 to 25 °C)
Humidity: 40 to 60% RH

Since the quality of any particular brand or type of paper may be changed by the manufacturer at any time, EPSON cannot guarantee the quality of any non-EPSON brand or type of paper. Always test a sample of paper stock before purchasing large quantities or printing large jobs.

Always load paper into the sheet feeder with the short edge first. Load envelopes flap edge left with the flap side down.

Printable Area

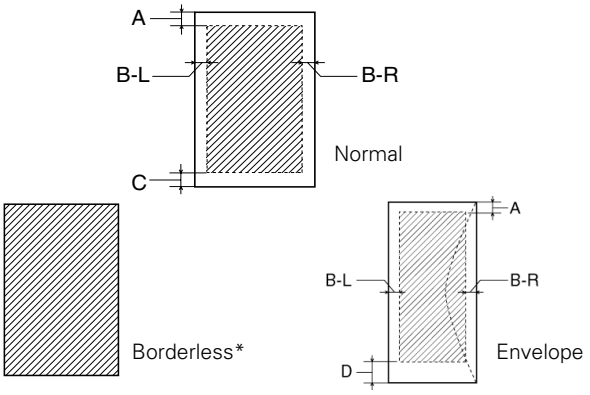

A	The minimum top margin is 0.12″ (3.0 mm).
B-L	The minimum left margin is 0.12″ (3.0 mm).
B-R	The minimum right margin is 0.12″ (3.0 mm).
C	The minimum bottom margin is 0.12″ (3.0 mm).
D	The minimum bottom margin is 0.78″ (20 mm) for envelopes
*	When printing with the borderless feature, print quality may decline in the expanded area. Before printing large jobs with the borderless setting, print a single sheet to check print quality.

Control Panel

To diagnose some problems, check the printer's control panel, as described below.

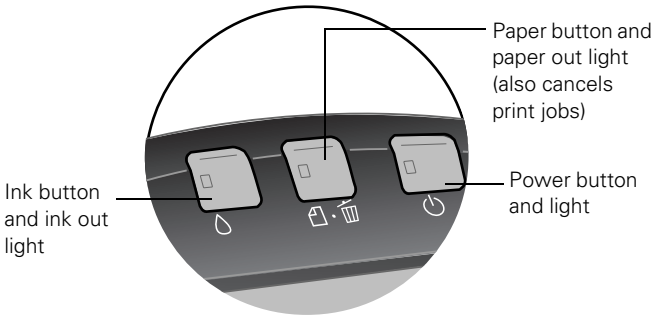

Follow the guidelines in this table when you check the control panel lights:

Green ⏻ power light flashes	The printer is receiving a print job, charging ink, cleaning the print head, or ink is being replaced.
Red paper light on	Your paper ran out. Load more and press the paper button.
Red paper light flashes	Paper is jammed in the printer. Press the paper button to eject the jammed paper. If the light is still flashing, open the cover and remove all paper, including any jammed or torn pieces. Then reload paper and press the paper button to continue printing.
Red ink light flashes	One of the cartridges is low on ink. Check the message that appears on your screen to determine which cartridge is low. Make sure you have a replacement cartridge.
Red ink light on	One of the cartridges is out of ink or not installed. Make sure you have a replacement cartridge. If you have just installed a new cartridge, it may be incompatible with the printer or incorrectly installed. Reinstall it or replace it with the correct cartridge.
Green ⏻ power light and red ink light are on	One or both of the ink cartridges is not installed correctly. Reinstall cartridges.
Green ⏻ power light is off; red paper and ink lights flashing alternately	Paper may be blocking movement of the print head. Turn off the printer, open the cover, and remove any jammed paper or other foreign objects. Turn the printer back on again. If the lights are still flashing, contact your dealer or EPSON.
Green ⏻ power light is off; red paper and ink lights flashing	The printer may have an internal error. Turn off the printer, wait a few seconds, and turn it on again. If the lights are still flashing, contact your dealer or EPSON.
Green ⏻ power light is off	The printer is not receiving power. Make sure the printer is on. Turn off the printer, plug in the power cord securely, and turn the printer on again. Make sure the outlet is working and is not controlled by a switch or timer. If in doubt, try another outlet.

Replacing an Ink Cartridge

- When the red ink light flashes, one or more ink cartridges are low on ink.
- When the red ink light stays on, you need to replace the cartridge(s).

When you print, you'll also see a message on your screen telling you which cartridge is low or empty.

When a cartridge is more than six months old, you may need to replace it if printouts don't look their best. If the quality doesn't improve after cleaning and aligning the print head, you can replace the cartridge even if the red ink light is off.

Checking the Ink Supply

To check your ink supply, do the following:

- **Windows:** Double-click the icon on the Windows taskbar. You see a window like this:

- **Macintosh OS X:** Double-click the EPSON Printer Utility icon in the Applications folder. Choose C84 Series and click OK. Then click EPSON Status Monitor. You see a window like this:

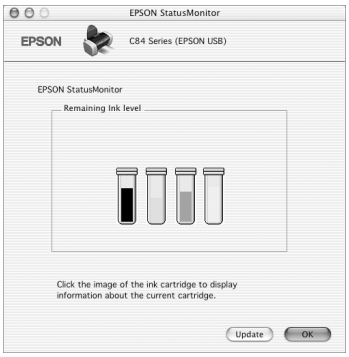

- **Macintosh OS 8.6 to 9.x:** From the File menu, select Print, then click the ink icon.

Ink Cartridge Precautions

Warning: Keep ink cartridges out of the reach of children and do not drink the ink.

If ink gets on your hands, wash them thoroughly with soap and water. If ink gets in your eyes, flush them thoroughly with water.

Caution: Don't remove the cartridge label, or ink will leak.

Don't remove the green IC chip from the cartridge. Installing a cartridge without an IC chip can damage the printer. Avoid touching the green IC chip, as this can damage the ink cartridge.

If you remove an ink cartridge temporarily, protect the ink supply port on the bottom of the cartridge from dirt and dust. Place it in a small box, or, if you have the original packaging, return it to its own box.

Store ink cartridges in the same environment as the printer. Stand the cartridges upright (the label identifying the color should be on the top).

Replacing an Empty or Low Ink Cartridge

Be sure you have a new ink cartridge before you begin. Once you start the ink cartridge replacement procedure, you must complete all the steps in one session.

Follow these steps to replace ink cartridges when the red ◊ ink out light is flashing or on:

1. Make sure the printer is turned on and not printing. The ⏻ power light should be on, but not flashing.
2. Lower the output tray and open the printer cover.
3. Press the ◊ ink button for one second. The print head moves to the left, and the cartridge that needs to be replaced stops under the ✗ mark. The ⏻ power light also begins to flash.

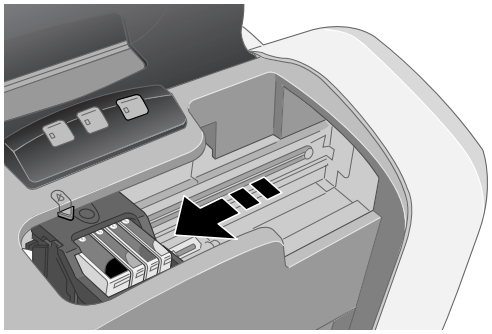

Caution: Don't press the ◊ ink button for more than 2 seconds, or the printer will start to clean the print head.

To avoid damaging the printer, never move the print head by hand.

4. Press the ◊ ink button again.
   - ❑ If more than one ink cartridge is empty, the next cartridge moves under the ✗ mark. This happens after you press the ◊ ink button for every ink cartridge that needs to be replaced.
   - ❑ If all the empty cartridges have been identified, the print head moves to the ink cartridge replacement position.

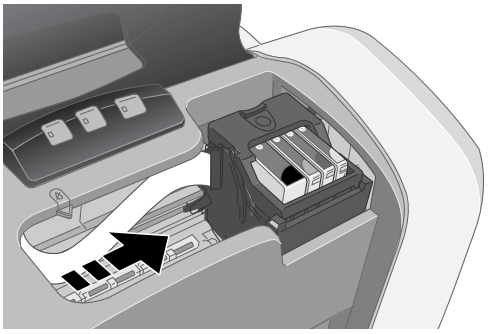

5. Open the cartridge cover.

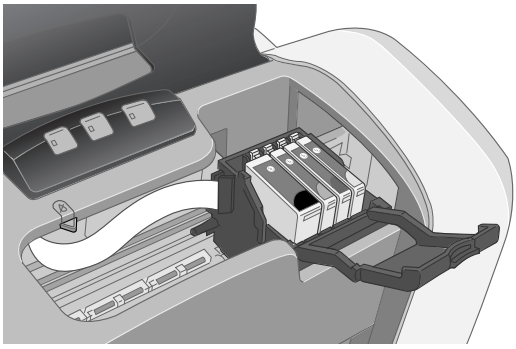

6. Pinch the back tab of the empty cartridge as you lift it out of the printer. Don't take the used cartridge apart or try to refill it.

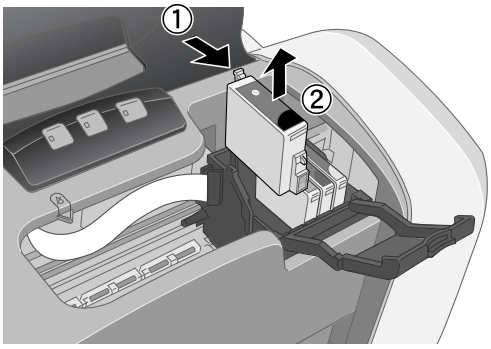

Warning: If ink gets on your hands, wash them thoroughly with soap and water. If ink gets into your eyes, flush them immediately with water.

7. Before you remove the new cartridge from its package, shake it four or five times.

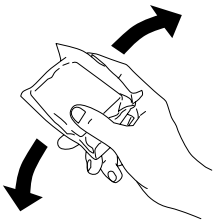

8. Remove the cartridge from its package and lower it into the cartridge holder. Push down gently until the cartridge is firmly seated.

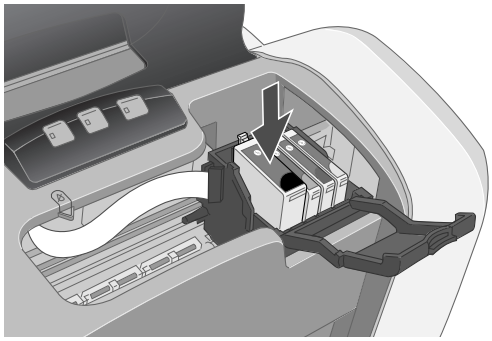

9. Repeat steps 5 through 7 for each cartridge that you need to replace.
10. Close the cartridge cover.

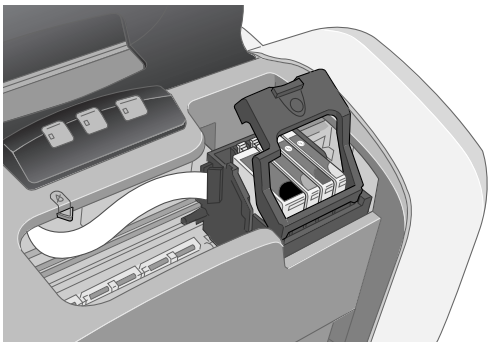

11. Close the printer cover and press the ◊ ink button for one second. The printer moves the print head and begins charging the ink delivery system.

    The green ⏻ power light flashes and the printer makes noise. Charging takes about one minute. When it's finished, the ⏻ power light stops flashing and stays on.

    Note: Never turn off the printer while the ⏻ power light is flashing, unless the printer hasn't moved or made noise for more than 5 minutes.

Replacing a Cartridge When Print Quality Declines

Even if the ◊ ink out light isn't flashing or on, you may need to replace an ink cartridge if it's been installed in your printer for more than six months and print quality declines.

Follow these steps to replace old ink cartridges:

1. Print a nozzle check pattern to determine which cartridges need to be replaced:

   Windows: Right-click the printer icon on the Windows taskbar, and then click Nozzle Check.

   Macintosh OS X: Open your Applications folder and double-click the EPSON Printer Utility icon. Select C84 Series in the printer list and click OK. Then click Nozzle Check.

   Macintosh 8.6 to 9.x: Open your application's File menu and choose Print. Click the Utility button, then click the Nozzle Check button.

2. Follow the instructions on the screen to print the nozzle check pattern. Then examine the pattern for gaps in the lines. You need to replace only those cartridges whose colors show gaps in the line pattern, as shown below.

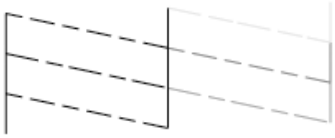

3. Make sure you have the correct replacement cartridges.

   Note: You must have the new ink cartridges before you continue. Once you start the ink cartridge replacement procedure, you must complete all the steps in one session.

4. Lower the output tray and open the printer cover.
5. Press the ◊ ink button. The print head moves to the ink cartridge replacement position, and the ⏻ power light begins to flash.

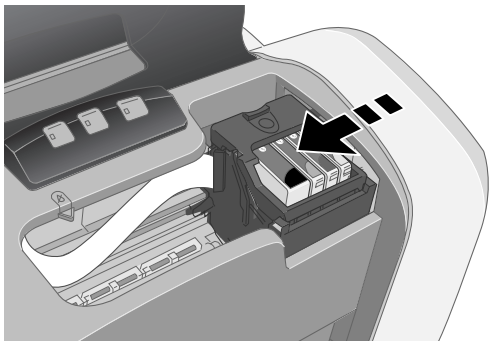

Note: Don't press the ⌂ ink button for more than 2 seconds, or the printer will start to clean the print head.

Caution: To avoid damaging the printer, never move the print head by hand.

6. Open the cartridge cover.

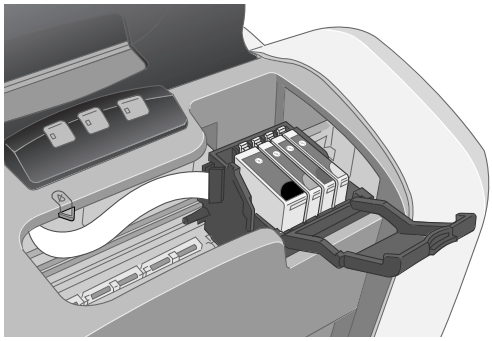

7. Pinch the back tab of the cartridge as you lift it out of the printer. Don't take the used cartridge apart or try to refill it.

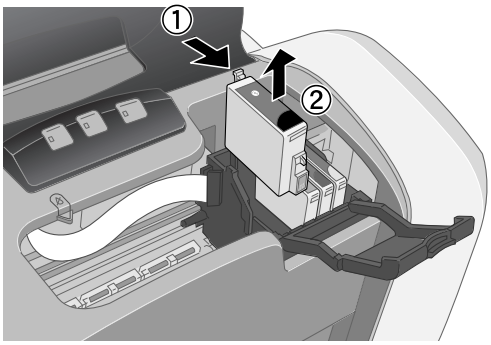

Warning: If ink gets on your hands, wash them thoroughly with soap and water. If ink gets in your eyes, flush them immediately with water.

8. Before you remove the new cartridge from its package, shake it four or five times.

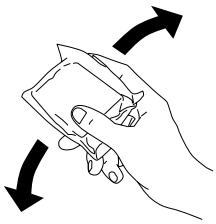

9. Remove the cartridge from its package and lower it into the cartridge holder. Push down gently until the new cartridge is firmly seated.

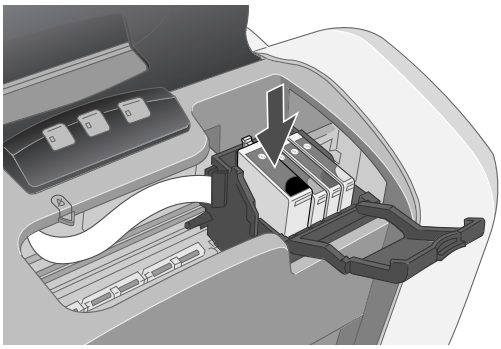

10. Repeat steps 7 through 9 for each cartridge you want to replace.
11. Close the cartridge cover.

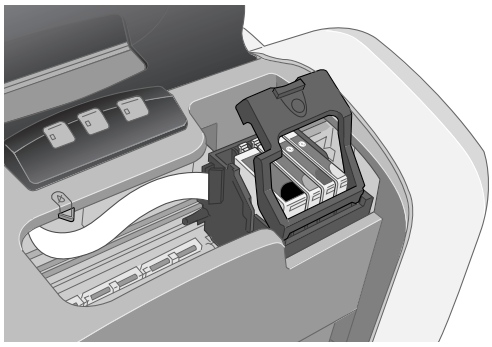

12. Close the printer cover and press the ⌂ ink button for one second. The printer moves the print head and begins charging the ink delivery system.

    The green ⏻ power light flashes and the printer makes noise. Charging takes about one minute. When it's finished, the ⏻ power light stops flashing and stays on.

Note: Never turn off the printer while the ⏻ power light is flashing, unless the printer hasn't moved or made noise for more than 5 minutes.

Caution: Install all four ink cartridges, and leave them installed for all types of printing, or the printer won't work.

Printing on Special Media

Select the correct Type or Media Type setting so your printer knows what kind of paper you're using and adjusts the ink coverage accordingly.

For this paper	Select this Media/paper Type setting
Plain paper sheets or envelopes EPSON Premium Bright White Paper	Plain Paper / Bright White Paper
EPSON Photo Quality Ink Jet Paper EPSON Photo Quality Ink Jet Cards EPSON Matte Paper Heavyweight EPSON Double-Sided Matte Paper EPSON Enhanced Matte Paper (Archival Matte Paper)	Matte Paper - Heavyweight
EPSON DURABrite Ink Glossy Photo Paper	DURABrite Ink Glossy Photo Paper
EPSON Photo Paper EPSON Glossy Photo Paper EPSON Premium Semigloss Photo Paper	Glossy Photo Paper
EPSON Ink Jet Transparencies	Ink Jet Transparencies

Printing Borderless Photos

You can print your photos with no margins, extending the image all the way to the edges of the page.

Although borderless printing is a bit slower, you get beautiful snapshots and enlargements, without trimming, on these papers and sizes:

Paper name	Sizes	Media/paper Type setting
EPSON Matte Paper Heavyweight	Letter (8.5 × 11 inches)	Matte Paper - Heavyweight
EPSON Photo Paper	4 × 6 Letter (8.5 × 11 inches)	Glossy Photo Paper
EPSON Glossy Photo Paper	4 × 6 Letter (8.5 × 11 inches)	
EPSON DURABrite Ink Glossy Photo Paper	4 × 6 Letter (8.5 × 11 inches)	DURABrite Ink Glossy Photo Paper

With proper care, photographs from your EPSON Stylus printer will last for many years. The special EPSON DuraBrite inks designed for your printer are formulated to achieve improved lightfastness when used with EPSON papers for prints that are properly displayed or stored. For best results, always use EPSON papers.

As with traditional photos, EPSON recommends proper care that will minimize color changes and lengthen display life:

- ❏ Frame prints under glass or a protective plastic sleeve to protect them from atmospheric contaminants like humidity, smoke, and high levels of ozone.
- ❏ As with all photographs, keep your prints away from direct sunlight.
- ❏ For proper storage, keep your prints in a photo album or plastic photo storage box in acid-free, archival sleeves commonly available from most camera stores.
- ❏ Always keep unused paper in the original package.

Loading Paper

Load paper as shown below, then follow the instructions for your operating system.

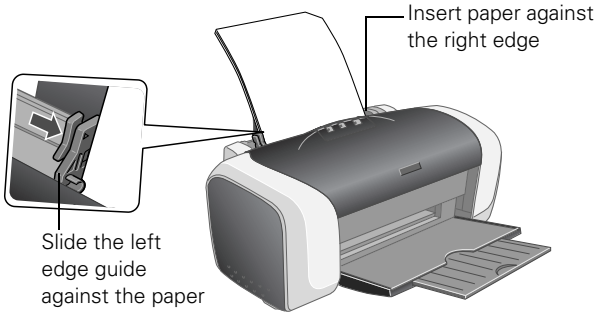

- ❏ Always load the short edge first, even for printing landscape-oriented photos.
- ❏ Load the printable side face up. It's usually whiter or brighter than the other side.
- ❏ Make sure the paper is under the tabs on the left and right edge guides.
- ❏ Check the paper package for more loading instructions.

Cleaning the Print Head

If your printouts are unexpectedly light, or dots or lines are missing, you may need to clean the print head. This unclogs the nozzles so they can deliver ink properly. Print head cleaning uses ink, so clean it only if quality declines.

This section explains how to clean the print head using the Head Cleaning utility.

You can also clean the print head by holding down the ◊ button on the printer for three seconds. (This only works when the red ◊ light is off.)

Caution: When you don't turn on your printer for a long time, print quality can decline, so turn it on and print a few pages at least once a month to maintain good print quality.

Running the Head Cleaning Utility

1. Make sure the printer is turned on but not printing, and the red ◊ ink light is off. (If the ◊ ink light is flashing or on, you need to replace a cartridge.)
2. **Windows:** Right-click the printer icon on your taskbar (in the lower right corner of your screen). Select Head Cleaning.

   Macintosh OS X: Open the Applications folder and double-click EPSON Printer Utility. Select Stylus C84 in the printer list, click OK, and select Head Cleaning.

   Macintosh OS 8.6 to 9.x: Open the File menu and choose Page Setup or Print. Click the utility button, then click the Head Cleaning button.
3. Follow the on-screen instructions to clean the print head.

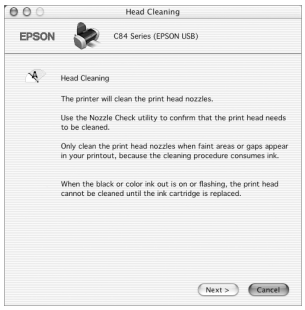

Macintosh

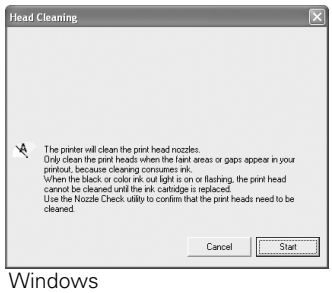

Windows

Cleaning takes several seconds. The printer makes noise and the green ⏻ power light flashes.

Caution: Never turn off the printer while the green ⏻ power light is flashing, unless the printer hasn't moved or made noise for more than 5 minutes.

4. When the green ⏻ power light stops flashing, make sure paper is loaded in the printer, then do the following:

   Windows: Click Print nozzle check pattern. Then click Print.

   Macintosh: Click Confirmation, then click Next.

   The nozzle check pattern prints (see "Examining the Nozzle Check Pattern" below for details).
5. If the nozzle check pattern has no gaps or white lines, click Finish.

   If the pattern has white lines, click Clean to clean the print head again.

   You can also turn the printer off and wait overnight—this allows any dried ink to soften—and then try cleaning the print head again.

Examining the Nozzle Check Pattern

Examine the nozzle check pattern you printed. Each staggered line should be solid, with no gaps, as shown.

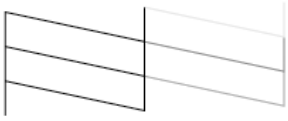

- ❏ If your printout looks okay, you're done.
- ❏ If you see any gaps (as shown below), clean the print head again.

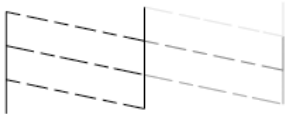

Aligning the Print Head

If your printouts contain misaligned vertical lines, or you see light or dark horizontal banding, you may need to align the print head.

Note: Banding may also occur if your cartridges are low on ink or you need to clean the print head.

1. Turn on the printer.
2. Load several sheets of paper.
3. **Windows:** Right-click the printer icon on your taskbar (in the lower right corner of your screen). Select Print Head Alignment.

   Macintosh OS X: Open the Applications folder and double-click the EPSON Printer Utility icon. Select C84 Series in the printer list, click OK, and select Print Head Alignment.

   Macintosh OS 8.6 to 9.x: From the File menu, select Page Setup or Print. Click the Utility button, then click the Print Head Alignment button.
4. Follow the instructions on the screen to print a black vertical alignment test page. You see this screen:

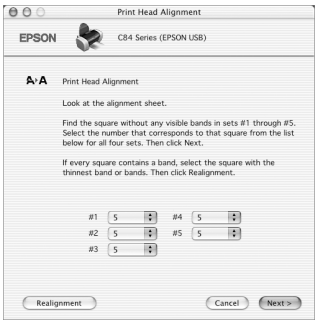

Macintosh

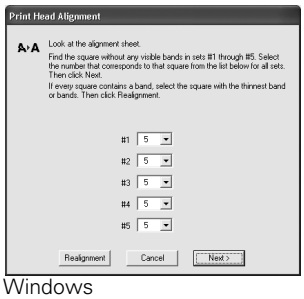

Windows

5. Look at the five sets of patterns in your printout. For each set, if you see a pattern with no visible vertical lines, enter its number in the corresponding box on the screen and click Next.

   If you can't find a pattern without any vertical lines, select the best pattern and click Realignment. Then repeat this step.
6. Click Print to print the color vertical alignment sheet. You see this screen:

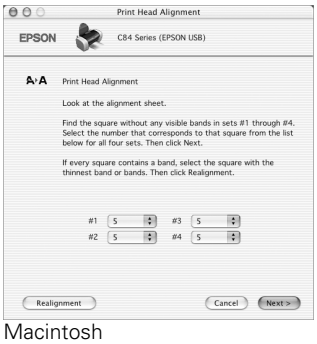

Macintosh

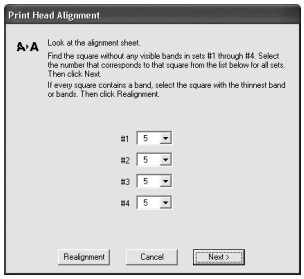

Windows

7. Look at the four sets of patterns in your printout. For each set, if you see a pattern with no visible vertical lines, enter its number in the corresponding box on the screen and click Next.

   If you can't find a pattern without any vertical lines, select the best pattern and click Realignment. Then repeat this step.
8. Click Print to print a black horizontal alignment sheet. You see this screen:

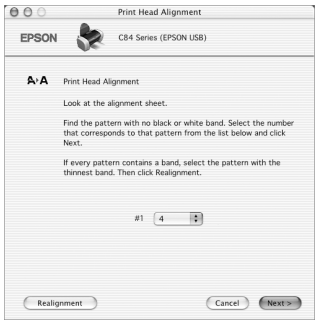

Macintosh

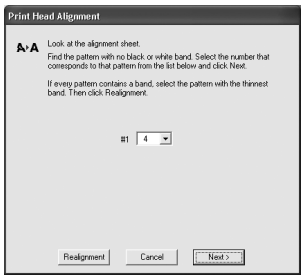

Windows

9. In your printout, select the pattern with no gap or line between the rectangles. Enter its number in the box on the screen and click Next.

   If you can't find an aligned pattern, choose the best pattern and click Realignment. Then repeat this step.

10. Click Print to print a color horizontal alignment sheet. You see this screen:

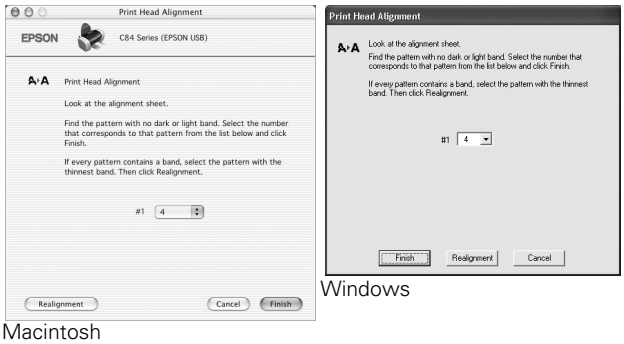

Macintosh Windows

11. In your printout, find the pattern with no gap or line between the rectangles and enter its number in the box on the screen.

    If you can't find an aligned pattern, choose the best pattern and click Realignment. Then repeat this step.

Click Finish to close the Print Head Alignment Utility.

Cleaning the Printer

To keep your printer working at its best, you should clean it several times a year.

1. Turn off the printer, unplug the power cord, and disconnect the cable.
2. Remove all the paper, then use a soft brush to clean the sheet feeder.
3. If the outer case or inside of the sheet feeder is dirty, clean it with a soft cloth dampened with mild detergent. Keep the printer cover closed to prevent water from getting inside.
4. If ink accidentally gets inside the printer, wipe off the rollers shown below with a damp cloth.

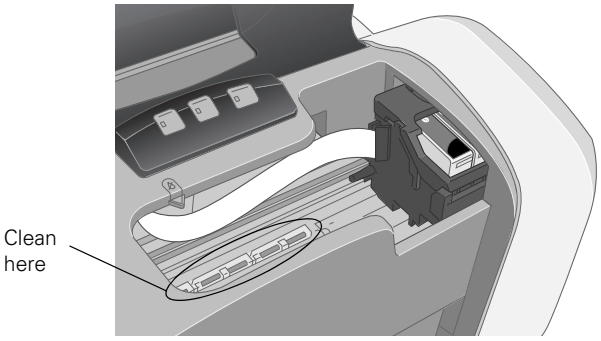

Warning: Don't touch the gears or any other parts inside the printer.

Caution: Never use a hard or abrasive brush, or benzine, alcohol, or paint thinner for cleaning; they can damage the printer components and case.

Don't get water on the printer components and don't spray lubricants or oils inside the printer.

Transporting the Printer

If you need to ship your printer, you must prepare it for transportation by removing the ink cartridges and packing the printer in its original box or one of a similar size.

1. Turn on the printer.
2. Remove any paper from the printer, then remove the paper support.
3. Open the printer cover.
4. Press the ◊ ink button. The print head moves to the ink cartridge replacement position, and the ⏻ power light begins to flash.

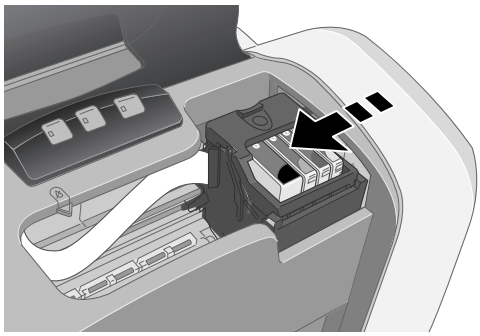

Note: Don't press the ◊ ink button for more than 2 seconds, or the printer will start to clean the print head.

Caution: To avoid damaging the printer, never move the print head by hand.

5. Open the cartridge cover.

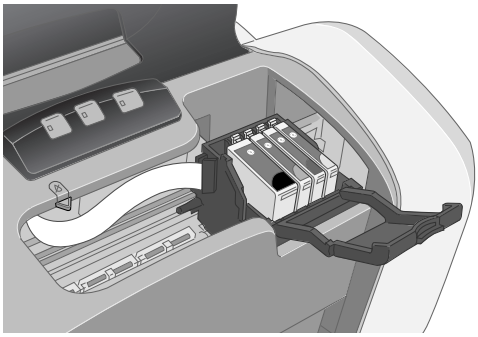

6. Pinch the back tab of each cartridge as you lift it out of the printer. Remove all the cartridges. Store the ink cartridges in a plastic bag or container, making sure that the tops of the cartridges are facing up.

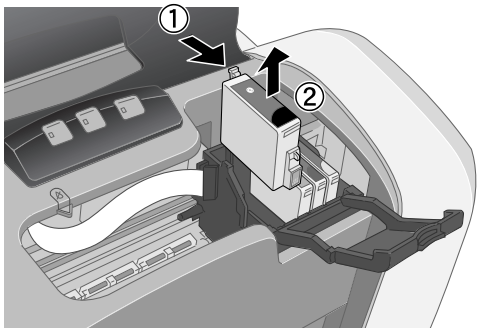

Warning: If ink gets on your hands, wash them thoroughly with soap and water. If ink gets in your eyes, flush them immediately with water.

7. Close the cartridge cover and press the ♢ ink button. Wait until the print head locks in the far right position. (Don't worry if the ♢ ink light is on.)
8. Press the ⏻ power button to turn off the printer. Unplug the power cord from the electrical outlet. Then disconnect the printer cable from the printer.
9. Secure the ink cartridge holder to the case with tape.

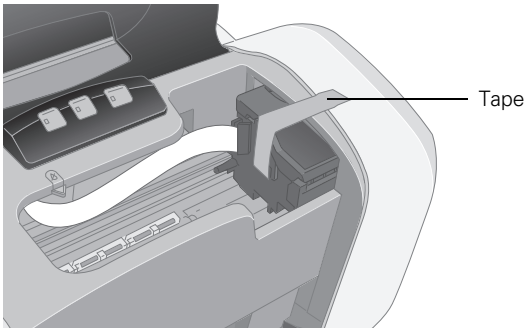

Caution: Be sure to remove the tape and reinstall the ink cartridges immediately after installing the printer in its new location.

10. Close the printer cover, push in the output tray extension, then close the output tray.
11. Repack the printer and its attachments in the original box using the protective materials that came with them.

Keep the printer level as you transport it.

After transporting the printer, remove the tape securing the print head, reinstall the ink cartridges, and test your printer. If you notice a decline in print quality, clean the print head; if output is misaligned, align the print head.

Related Documentation

CPD-16675	EPSON Stylus C84 *Start Here*
CPD-16674	EPSON Stylus C84 *Printer Basics*
CPD-16673	EPSON Stylus C84 CD-ROM with *User's Guide*
CPD-16799	*Ink Cartridge Quick Reference* slipsheet (lists ink cartridges and capacities)